Zennio®

ZS55 Switches & Sockets

Electrical accessories

ZS55 Series

Complete your automation installation with electrical accessories that combine perfectly with our capacitive touch switches and touch panels. Timeless designs flush-fitted in the frames. Combine them anyway you want.

Index

Sockets	04
Switches	09
USB Charger	14
Data outlets	18
TV-R	22
Multimedia	26
Accessories	31
Frames	35

Sockets

Sockets - Characteristics and dimensions

	Schuko	French	Euro-American
Colours: anthracite, silver, white and gloss white	✓	✓	✓
Socket type	F	E	Euro-American
Rated current / voltage	16 A / 250 V ~	16 A / 250 V ~	16 A / 127-250 V ~
Maximum cable cross-section	2.5 mm^2	2.5 mm^2	2.5 mm^2
Connection method	Screw terminal block	Screw terminal block	Screw terminal block
Fixing mechanism	With screws. Optional claws	With screws. Optional claws	With screws. Optional claws
Child safety shutter	✓	✓	✓
Norm	IEC 60884-1	IEC 60884-1	-

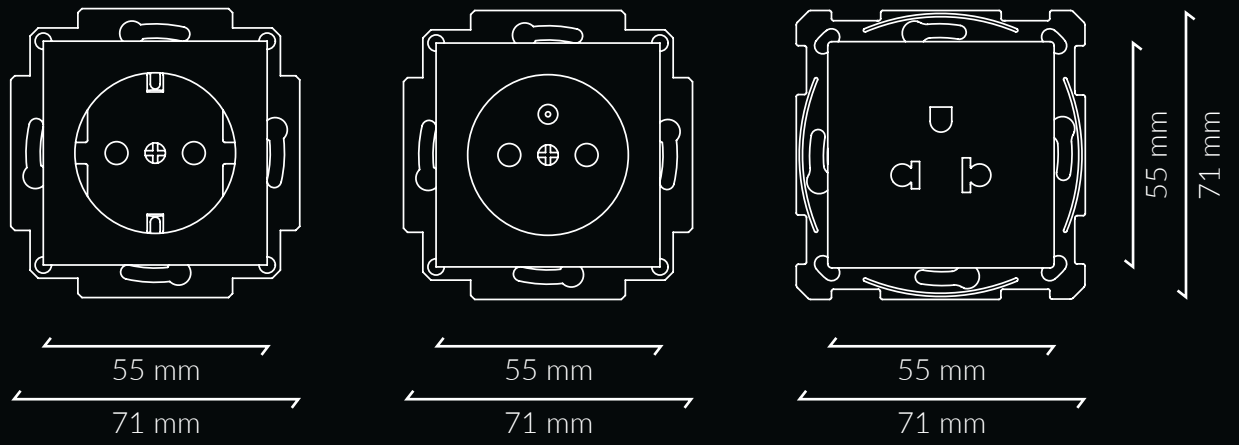

Sockets - Reference codes

Schuko

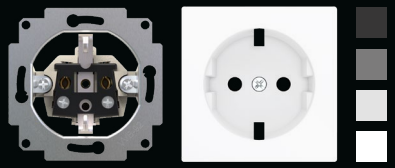

8300003	Schuko socket insert 16 A / 250 V ~ - screw terminals (without cover 8300004xx)
830000405	Schuko socket cover 55x55 mm - Anthracite
830000406	Schuko socket cover 55x55 mm - Silver
830000407	Schuko socket cover 55x55 mm - White
830000408	Schuko socket cover 55x55 mm - Gloss White

French

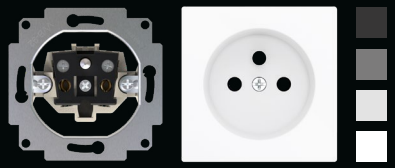

8300005	French socket insert 16 A / 250 V ~ - screw terminals (without cover 8300006xx)
830000605	French socket cover 55x55 mm - Anthracite
830000606	French socket cover 55x55 mm - Silver
830000607	French socket cover 55x55 mm - White
830000608	French socket cover 55x55 mm - Gloss White

Euro-American

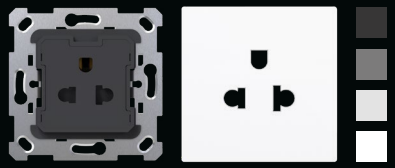

8300001	Euro-American socket insert - screw terminals (without cover 8300002xx)
830000205	Euro-American socket cover 55x55 mm - Anthracite
830000206	Euro-American socket cover 55x55 mm - Silver
830000207	Euro-American socket cover 55x55 mm - White
830000208	Euro-American socket cover 55x55 mm - Gloss White

Sockets - Available finishes

Slide over the colours to display the different finishes.

Switches

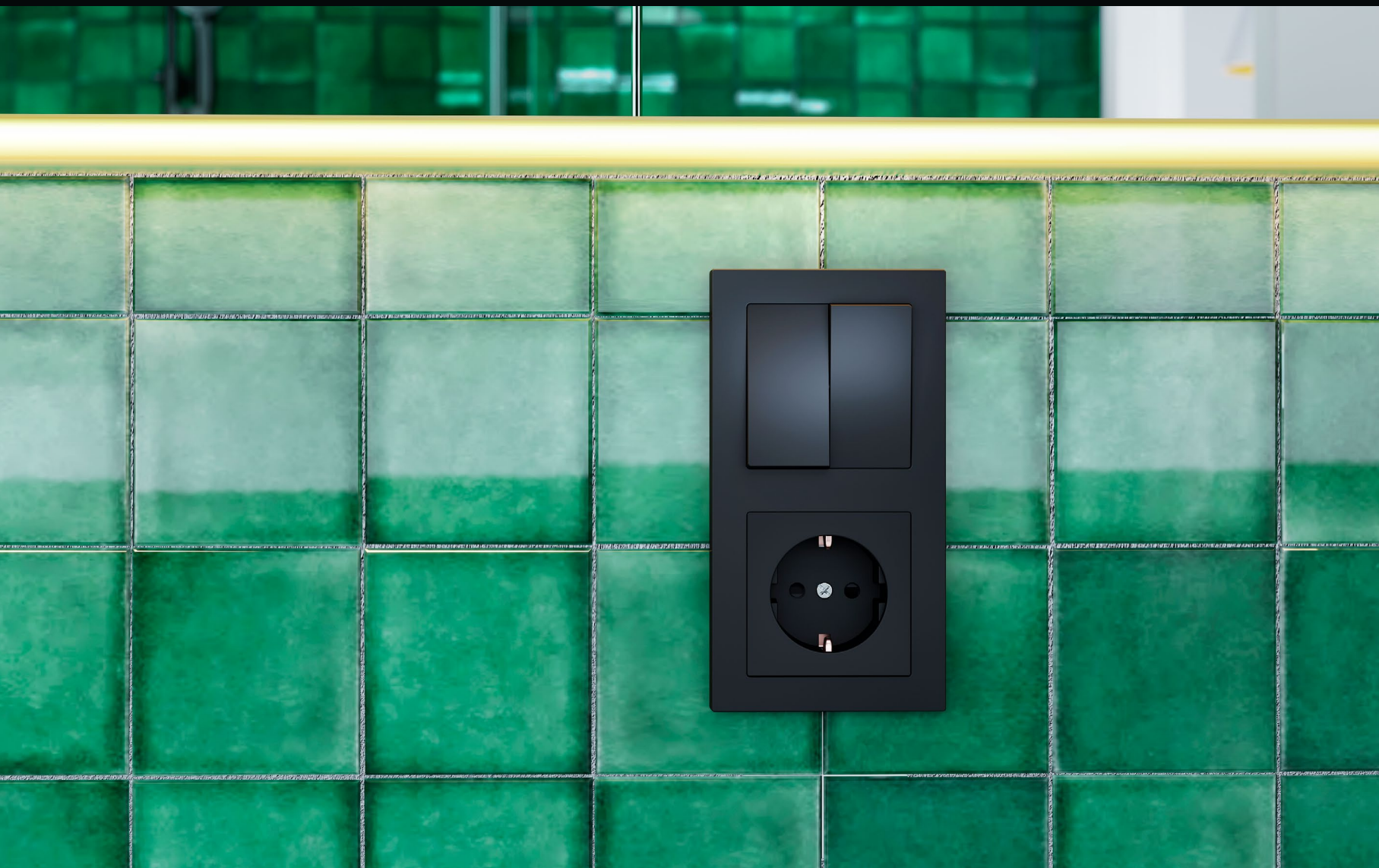

Switches - Characteristics and dimensions

	Simple	Double
Colours: anthracite, silver, white and gloss white	✓	✓
Rated current / voltage	10 AX / 250 V ~	10 AX / 250 V ~
Maximum cable cross-section	2.5 mm^2	2.5 mm^2
Connection method	Screw terminal block	Screw terminal block
Fixing mechanism	With screws. Optional claws	With screws. Optional claws
Personalised icons on cover	✓	✓
International standard	IEC 60669-1	IEC 60669-1

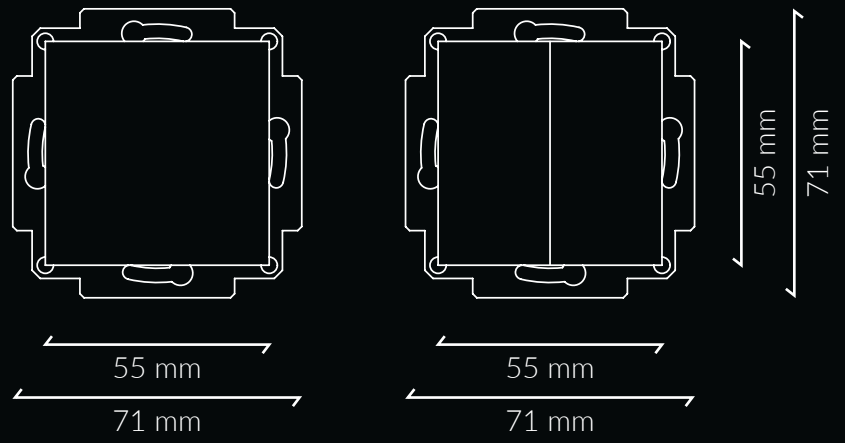

Switches

Single switch / push button

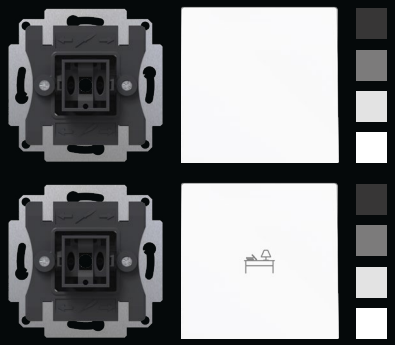

8300016	Single one-way rocker switch insert 10 AX / 250 V ~ (without cover 8300017xx)
8300031	Single two-way rocker switch insert 10 AX / 250 V ~ (without cover 8300017xx)
8300032	Single intermediate rocker switch insert 10 AX / 250 V ~ (without cover 8300017xx)
8300033	Single push button switch insert 10 A / 250 V ~ (without cover 8300017xx)
830001705	Single switch cover 55x55 mm - Anthracite
830001706	Single switch cover 55x55 mm - Silver
830001707	Single switch cover 55x55 mm - White
830001708	Single switch cover 55x55 mm - Gloss White
830004205	Single switch cover 55x55 mm - Anthracite - Custom
830004206	Single switch cover 55x55 mm - Silver - Custom
830004207	Single switch cover 55x55 mm - White - Custom
830004208	Single switch cover 55x55 mm - Gloss White - Custom

Double switch / push button

8300018	Double one-way rocker switch insert 10 AX / 250 V ~ (without cover 8300019xx)
8300034	Double two-way rocker switch insert 10 AX / 250 V ~ (without cover 8300019xx)
8300036	Double push button switch insert 10 A / 250 V ~ (without cover 8300019xx)
830001905	Double switch cover 55x55 mm - Anthracite
830001906	Double switch cover 55x55 mm - Silver
830001907	Double switch cover 55x55 mm - White
830001908	Double switch cover 55x55 mm - Gloss White
830004405	Double switch cover 55x55 mm - Anthracite - Custom
830004406	Double switch cover 55x55 mm - Silver - Custom
830004407	Double switch cover 55x55 mm - White - Custom
830004408	Double switch cover 55x55 mm - Gloss White - Custom

Switches - Available finishes

Slide over the colours to display the different finishes.

USB Charger

USB Charger - Characteristics and dimensions

	Double USB charger
Colours: anthracite, silver, white and gloss white	✓
Input voltage	100 - 240 V ~
Output voltage	5 V DC
Output current	3.5 A (max)
Standby consumption	< 0.05 W
Connection method	Screw terminal block
Fixing mechanism	With screws. Optional claws
Insert type	2 x USB A

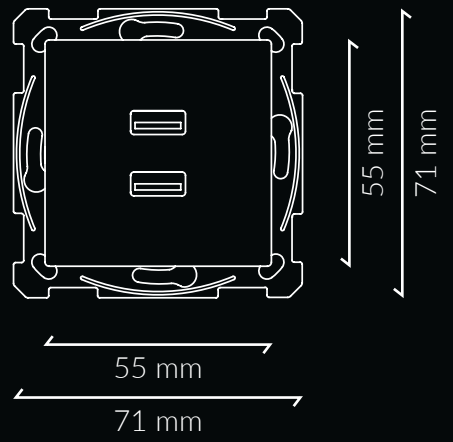

USB Charger - Reference codes

USB charger

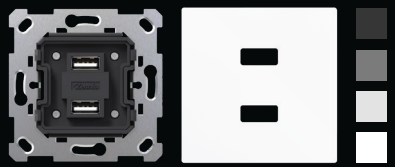

8300007	Double USB charger insert 5 V / 3.5 A (without cover 8300008xx)
830000805	Cover plate for double USB charger 55x55 mm - Anthracite
830000806	Cover plate for double USB charger 55x55 mm - Silver
830000807	Cover plate for double USB charger 55x55 mm - White
830000808	Cover plate for double USB charger 55x55 mm - Gloss White

USB Charger - Available finishes

Slide over the colours to display the different finishes.

Data outlets

Data outlets - Characteristics and dimensions

	RJ45 Simple	RJ45 Doble
Colours: anthracite, silver, white and gloss white	✓	✓
Connection method	Crimped	Crimped
Fixing mechanism	With screws. Optional claws	With screws. Optional claws
Internal connection fixing	Keystone	Keystone
Norms	EN55022, EN55024, IEC61000-4-5	EN55022, EN55024, IEC61000-4-5

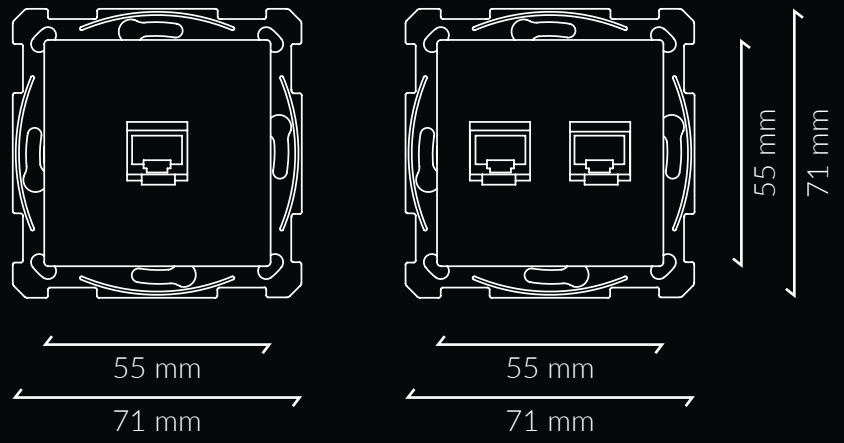

Simple and double RJ45 outlet

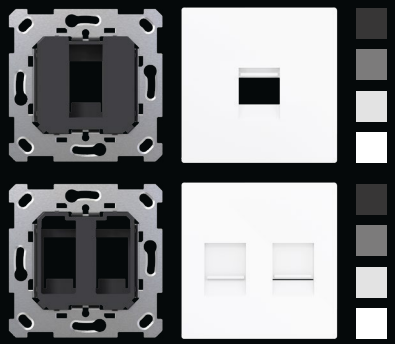

8300009	RJ45 connector – 1 insert (without keystone and cover 8300012xx)
8300037	RJ45 connector – 2 inserts (without keystone and cover 8300013xx)
8300046	RJ45 Cat. 5e connector - keystone
8300047	RJ45 Cat. 6A connector - keystone
830001205	Cover plate for RJ45 connector 55x55 mm - 1 insert - Anthracite
830001206	Cover plate for RJ45 connector 55x55 mm - 1 insert - Silver
830001207	Cover plate for RJ45 connector 55x55 mm - 1 insert - White
830001208	Cover plate for RJ45 connector 55x55 mm - 1 insert - Gloss White
830001305	Cover plate for RJ45 connector 55x55 mm - 2 inserts - Anthracite
830001306	Cover plate for RJ45 connector 55x55 mm - 2 inserts - Silver
830001307	Cover plate for RJ45 connector 55x55 mm - 2 inserts - White
830001308	Cover plate for RJ45 connector 55x55 mm - 2 inserts - Gloss White

Data outlets - Available finishes

Slide over the colours to display the different finishes.

TV-R/AERIAL

TV-R/AERIAL - Characteristics and dimensions

	TV-R
Colours: anthracite, silver, white and gloss white	✓
Diameter	12.5 mm
Frequency range	5-2400 MHz
Connection method	Screw
Fixing mechanism	With screws or clamps (included)
Norms	EN60728-11, EN50083-2 + A1, EN50581

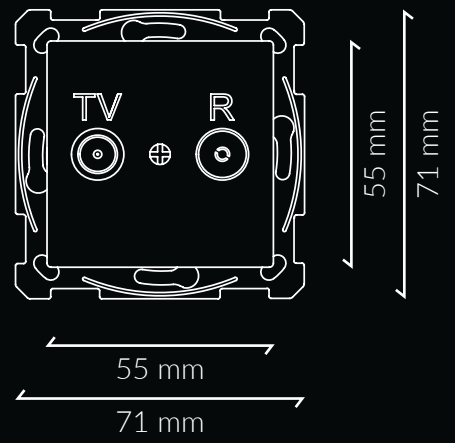

TV-R/AERIAL - Reference codes

TV-R/AERIAL

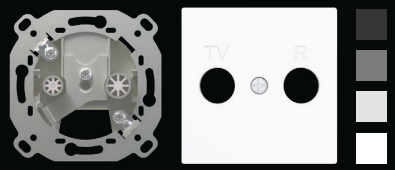

8300014	TV-R - Intermediate insert (without cover 8300015xx)
8300040	TV-R - End-of-line insert (without cover 8300015xx)
8300048	TV-R/SAT – End-of-line insert (without cover 8300015xx)
830001505	Cover plate for TV/R insert 55x55 mm - Anthracite
830001506	Cover plate for TV/R insert 55x55 mm - Silver
830001507	Cover plate for TV/R insert 55x55 mm - White
830001508	Cover plate for TV/R insert 55x55 mm - Gloss White

TV-R/AERIAL - Available finishes

Slide over the colours to display the different finishes.

Multimedia

Multimedia - Characteristics and dimensions

	Jack 3.5 mm	RCA	HDMI
Colours: anthracite, silver, white and gloss white	✓	✓	✓
Connector type	Female	Female	Female (I/O)
Connection method	Screw	Screw	HDMI
Fixing mechanism	With screws. Optional claws	With screws. Optional claws	With screws. Optional claws
Internal connection fixing	Keystone	Keystone	Keystone
Norms	CE	CE	EN55022, EN55024 and IEC61000-4-5

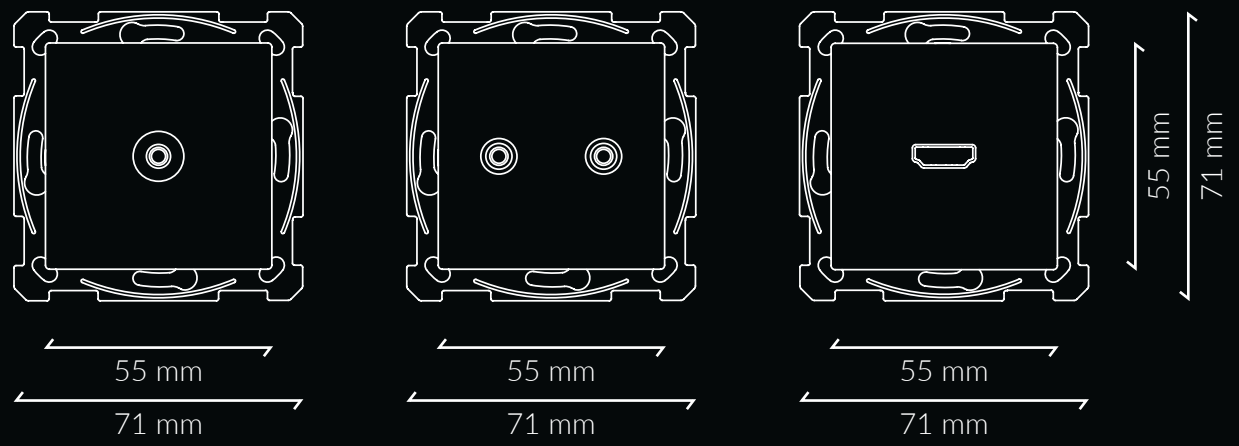

Jack 3.5 mm

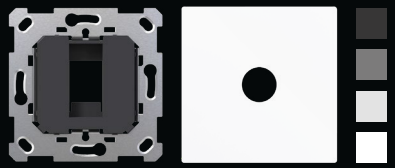

8300024	HDMI or Jack 3.5 mm insert support (without keystone and cover 8300025xx/8300027xx)
8300050	Jack 3.5 mm audio keystone
830002705	Cover for jack 3.5mm insert 55x55 mm - Anthacite
830002706	Cover for jack 3.5mm insert 55x55 mm - Silver
830002707	Cover for jack 3.5mm insert 55x55 mm - White
830002708	Cover for jack 3.5mm insert 55x55 mm - Gloss White

RCA

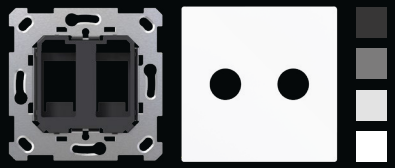

8300022	RCA audio insert (without keystones and cover 8300023xx)
8300051	RCA audio keystones
830002305	Cover for RCA insert 55x55 mm - Anthracite
830002306	Cover for RCA insert 55x55 mm - Silver
830002307	Cover for RCA insert 55x55 mm - White
830002308	Cover for RCA insert 55x55 mm - Gloss White

HDMI

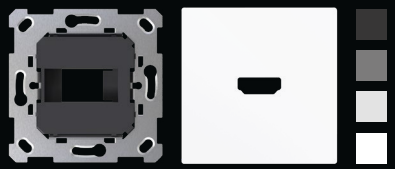

8300024	HDMI or Jack 3.5 mm insert support (without keystone and cover 8300025xx/8300027xx)
8300049	HDMI keystone
830002505	Cover for HDMI insert 55x55 mm - Anthracite
830002506	Cover for HDMI insert 55x55 mm - Silver
830002507	Cover for HDMI insert 55x55 mm - White
830002508	Cover for HDMI insert 55x55 mm - Gloss White

Multimedia - Available finishes

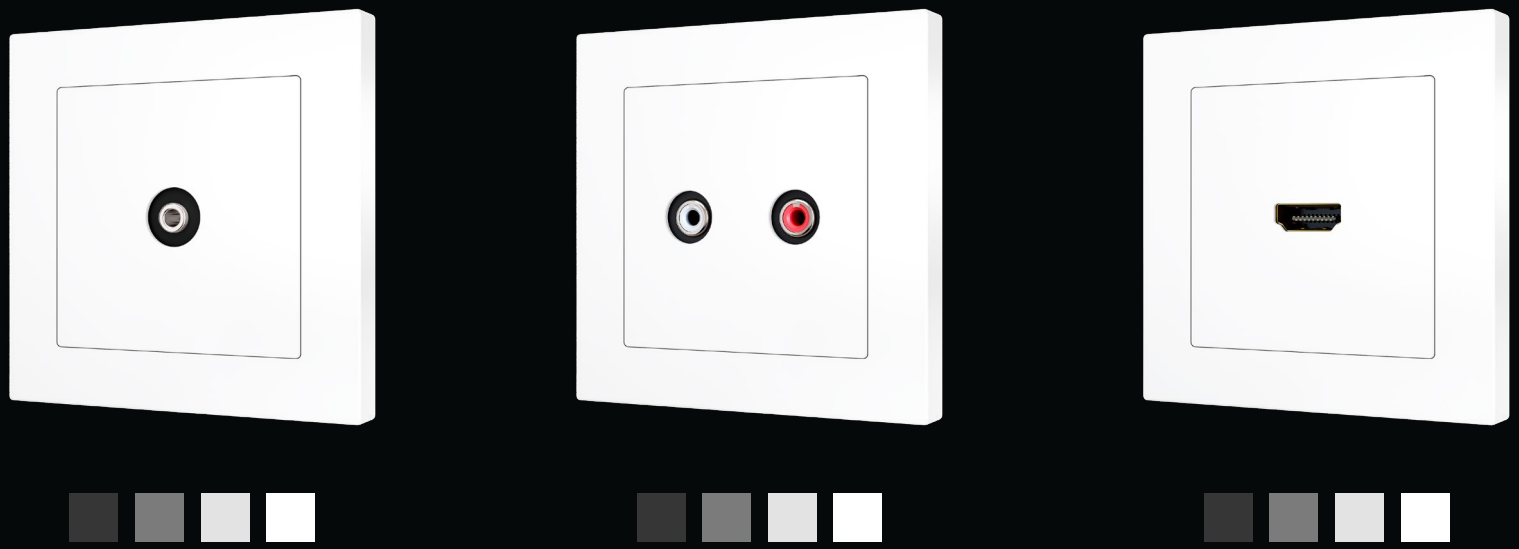

Slide over the colours to display the different finishes.

Accessories

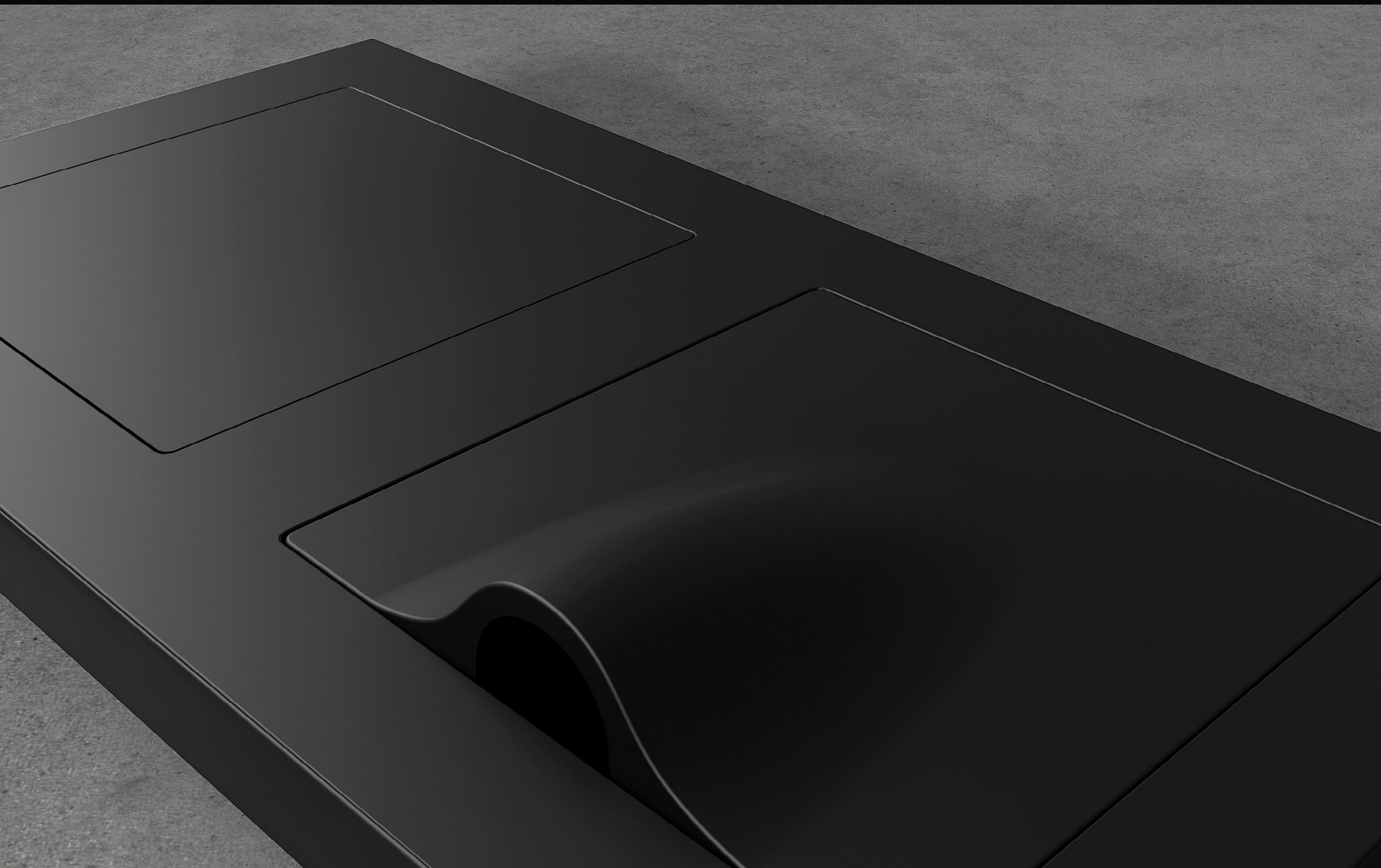

Accessories - Characteristics and dimensions

	Cable outlet	Blind cover
Colours: anthracite, silver, white and gloss white	✓	✓
Fixing mechanism	With screws. Optional claws	With screws. Optional claws

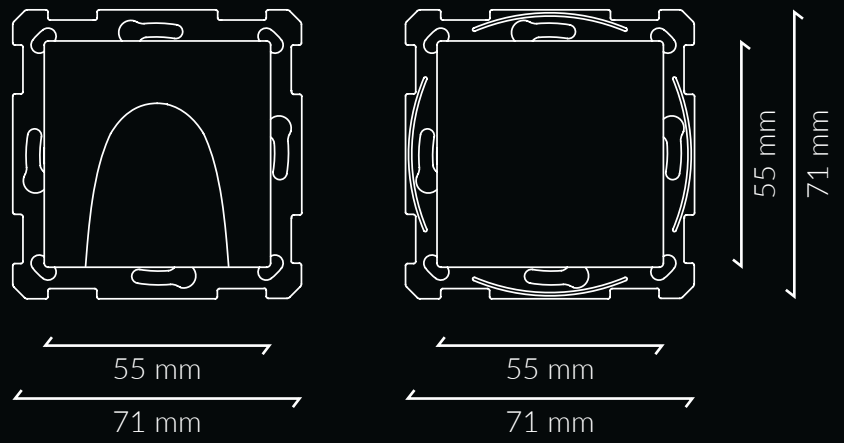

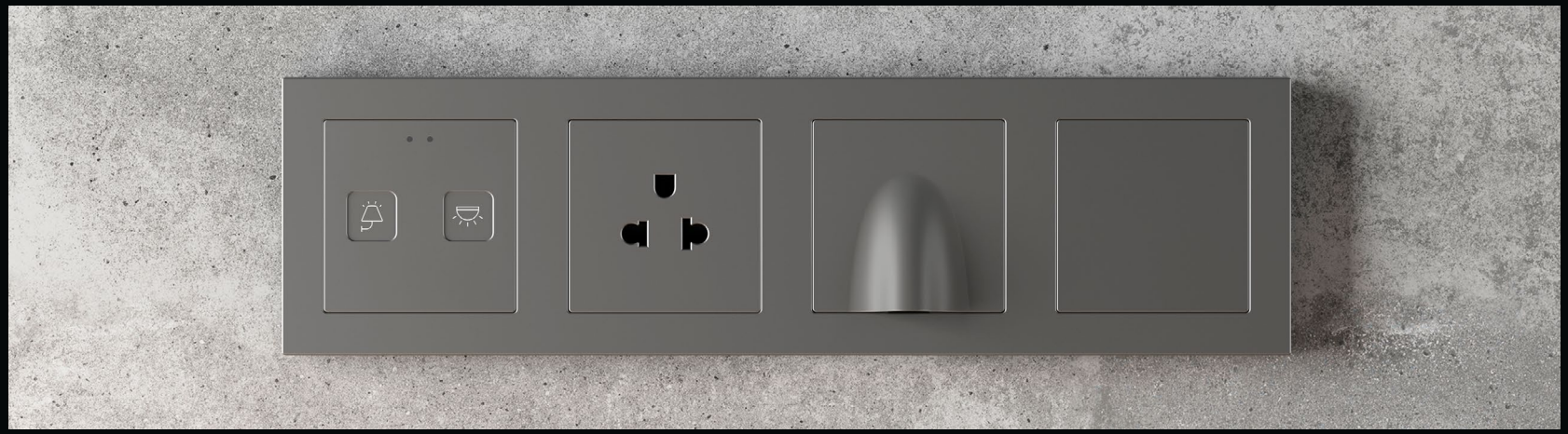

Cable outlet

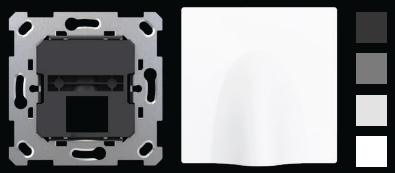

8300020	Cable outlet insert (without cover 8300021xx)
830002105	Cable outlet cover 55x55 mm - Anthracite
830002106	Cable outlet cover 55x55 mm - Silver
830002107	Cable outlet cover 55x55 mm - White
830002108	Cable outlet cover 55x55 mm - Gloss White

Blind cover

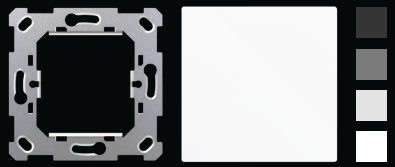

8300035	Metallic plate for ZS55 family
830002805	Blind cover 55x55 mm - Anthracite. Metallic plate (8300035) is needed but not included
830002806	Blind cover 55x55 mm - Silver. Metallic plate (8300035) is needed but not included
830002807	Blind cover 55x55 mm - White. Metallic plate (8300035) is needed but not included
830002808	Blind cover 55x55 mm - Gloss White. Metallic plate (8300035) is needed but not included

Accessories - Available finishes

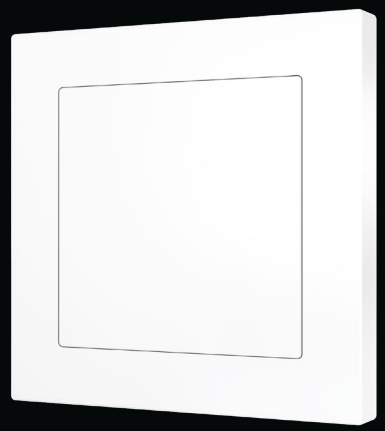

Slide over the colours to display the different finishes.

Frames

Frames - Characteristics and dimensions

	Frames
Colours: anthracite, silver, white and gloss white	✓
Flush finish with ZS55 series switches and accessories	✓
Portrait and vertical installation	✓

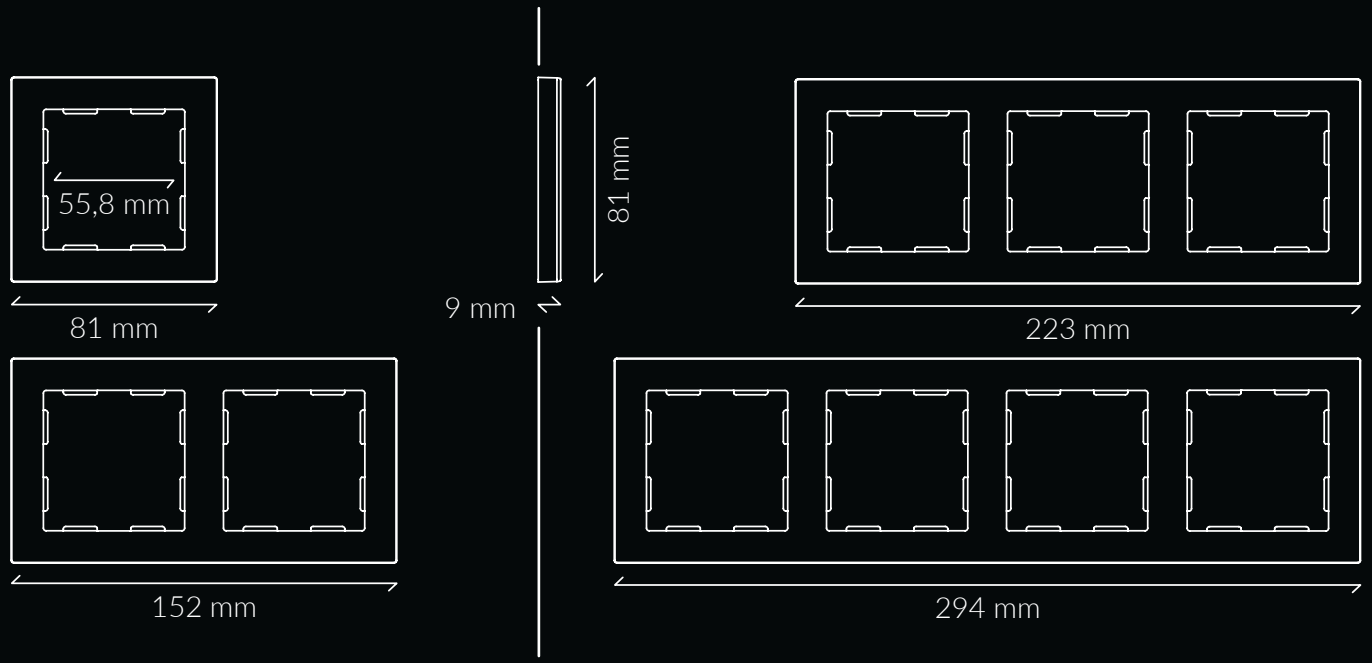

11:24
11:24

Frames - Reference codes

1-gang

980000105	1-gang Frame - Anthracite
980000106	1-gang Frame - Silver
980000107	1-gang Frame - White
980000108	1-gang Frame - Gloss White

2-gang

980000205	2-gang Frame - Anthracite
980000206	2-gang Frame - Silver
980000207	2-gang Frame - White
980000208	2-gang Frame - Gloss White

3-gang

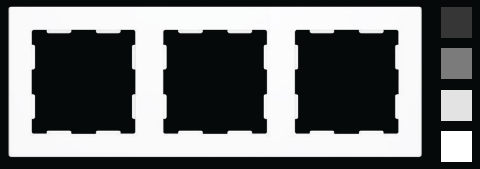

980000305	3-gang Frame - Anthracite
980000306	3-gang Frame - Silver
980000307	3-gang Frame - White
980000308	3-gang Frame - Gloss White

4-gang

980000405	4-gang Frame - Anthracite
980000406	4-gang Frame - Silver
980000407	4-gang Frame - White
980000408	4-gang Frame - Gloss White

Frames - Available finishes

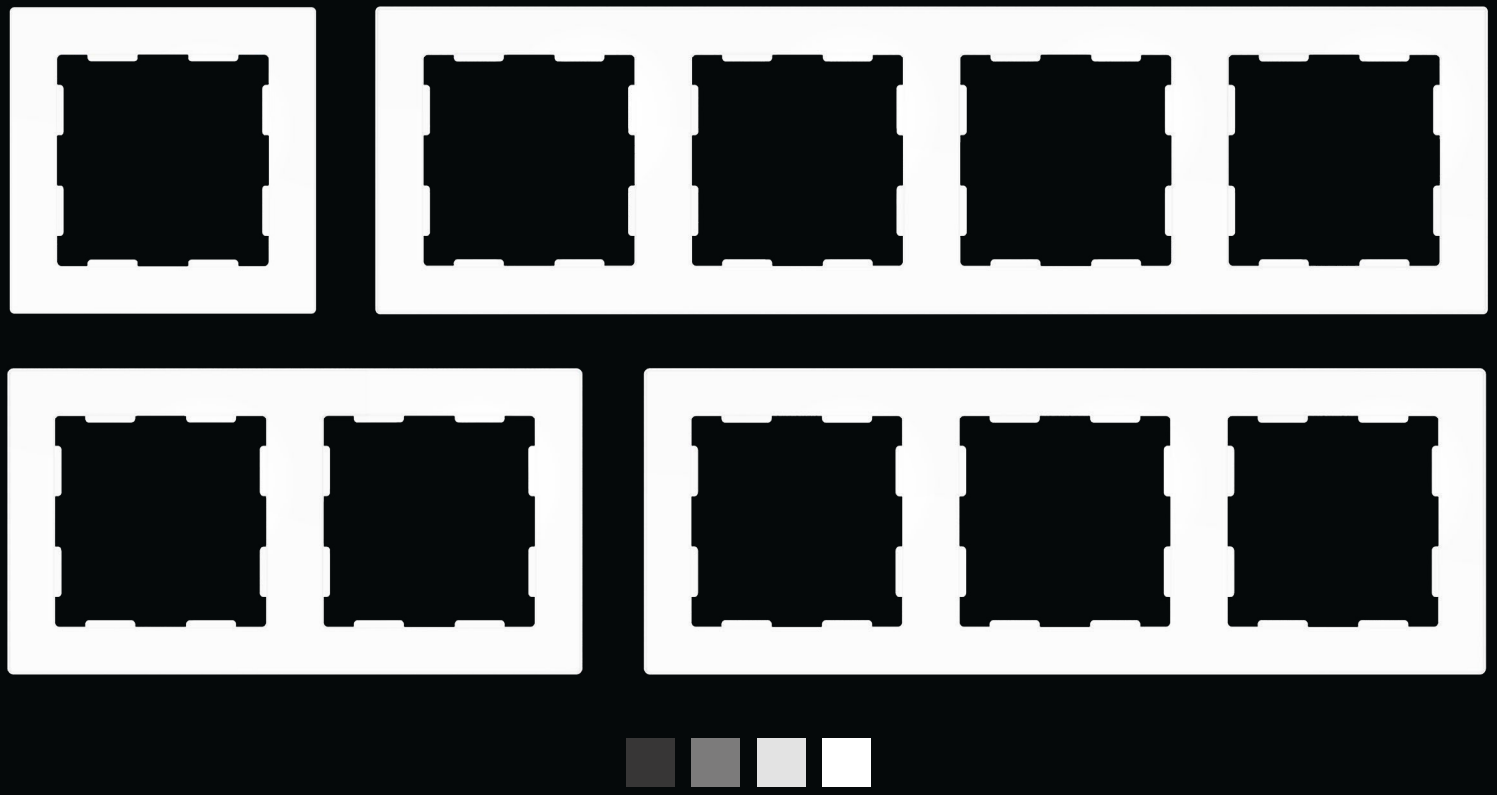

Slide over the colours to display the different finishes.

Learn more
about the whole range
in our website

www.zennio.com